NOTICE TECHNIQUE

IMPORTANT SAFEGUARD

- **Appliance is for household use and that all servicing shall be performed by an authorized service representative.**

- All the instructions mentioned in this book must be read carefully.
- Do not touch hot surfaces such as: cup warmer tray, infusion unit, steam outlet or hot water outlet.
- Do not spray the steam or hot water jets directly towards or on oneself when using the machine.
- Before connecting or disconnecting the machine, ensure the switch (F) is on position "0".
- Allow the machine to cool, by switching off (and removing plug) before carrying out any cleaning or maintenance work.
- To avoid injury, shock or fire, cable & plug must be kept dry at all times.
- Do not let cord hang over edge of table or counter, or be exposed to heat.
- Do not operate any appliance with a damaged cord or plug or after the appliance malfunctions, or has been damaged in any manner. Return appliance to the nearest authorized service facility for examination, repair or adjustment.
- If children are present, special care must be taken.
- Do not use non-recommended accessories or spare parts, to avoid risk of fire, injury or shock.
- Do not use the machine for any purpose other than that for which it is designed.
- Do not use the machine outdoors, unless under complete cover.

SAVE THESE INSTRUCTIONS

PONY ESPRESSO T MODEL

- The quality in the cup of a perfect espresso is obtained by using some components of professional coffee machines which ensure a thermic stability and a constant infusion pressure
- Hot water and cappuccino outlets according to model

Easiness for use and cleanliness thanks to the patented system of the cup holder with automatic ejection of doses

- 4-liter tank: about 40 cups between two fillings
- Safety of water lack: the machine stops to protect the pump
- Integrated cup warmer to enjoy your espresso at the best temperature.
- Metallic manufacturing of semi-professional type

Easiness for installation: an electric plug is sufficient.

INSTALLATION

- SITING

The machine must be sited on a flat even surface. The position must be ventilated correctly.
A free space of 5cm (2 inches) must be left all round the machine.

- ELECTRIC CONNECTIONS

Earth connection is mandatory.

The electrical supply must be protected and rated according to prevailing local standards,according to the following data:

MODEL	Tension	Frequency	Power	Current
PONY T 134 (COFFEE - STEAM - HOT WATER)	120 V	60 Hz	1800 W	15 A

The machine is not to be operated at any other voltage than described on the name plate.
Always check before switching on.

- ASSEMBLING THE ACCESSORIES

The loose fittings accessories are supplied in a separate box. Follow Fig. 2 & 3 for their assembly and the following instructions:

– filter-holder (Fig. 2)
The assembly and fitting to the machine is carried out by following Fig. 2.
The filter (B) must be pressed into position in the holder (C) until stop.
The holder (C) must be placed into its turning support (D) as shown on Fig. 2.

– Steam tube (according to model) (Fig. 3)
The (K) set must be screwed with the gasket (J) on the steam outlet pipe (H).

Fig 2

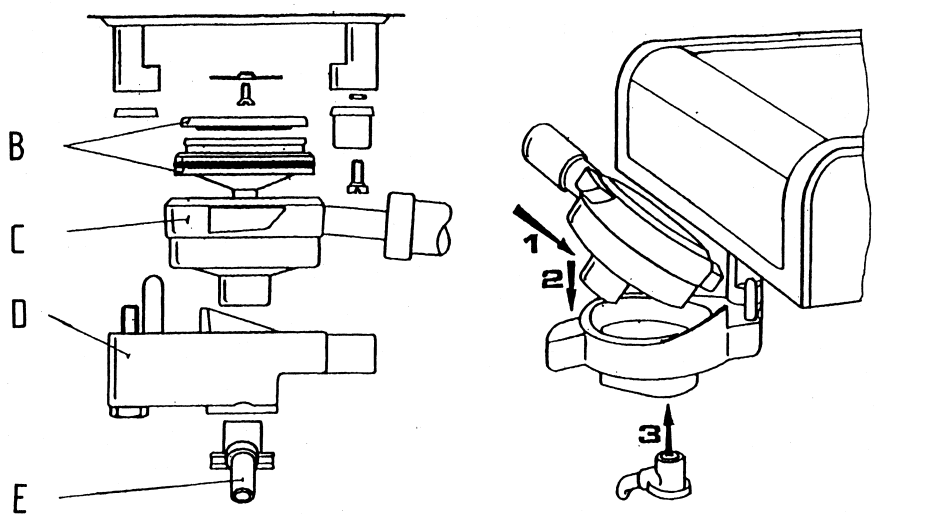

Fig 3

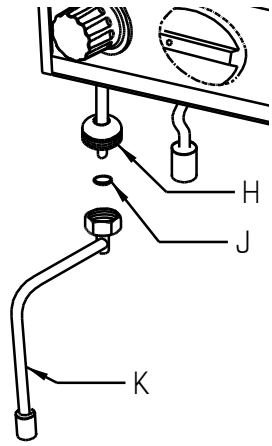

OPERATION

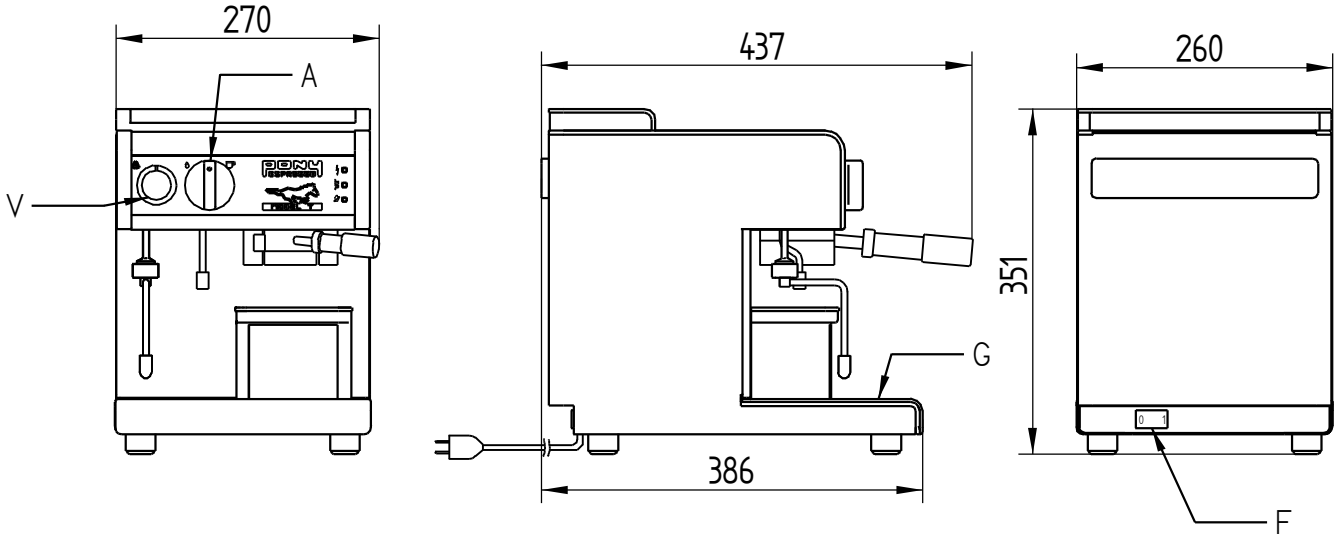

- START-UP

– Before starting up the machine, it must be checked that all water and electrical supplies are in accordance with the previous pages.
– Fill the water tank.
– Put the switch (F) of the machine on position "1".

The heating now takes place automatically.
When the heating control light is unlit, the machine is ready for use.

- PREPARING THE COFFEE

ATTENTION : risk of injury through scalding. Never remove the filter-holder before the end of the infusion cycle.

– Twist the filter-holder to the left and insert one pod in the filter (B).
– Then twist to the right until held firmly.
– Place a cup below the delivery spouts (E).
– Turn the control button (A) to the right to start infusion.
– Turn the button to its initial position when the quantity obtained in the cup is suitable for you.

Wait for infusion cycle to finish, then twist the filter-holder to the left to place a new pod. The waste pod is automatically ejected into the box provided, it will hold about 12 pods.

– After each use it is advised to take the waste coffee off, and to insert the filter-holder in the unit to maintain it on good temperature.

– After each infusion, a small quantity of water is ejected into the drip tray (G). You should empty the drip tray each 50 cups about.

- PRODUCING HOT WATER (according to model)

– Place the container below the tube (L)
– Turn the control button (A) to the left to start the producing of hot water
– Turn the button to its initial position to stop.

- PREPARING CAPPUCCINO (according to model)

– Immerse the tube (K) in the milk
– Turn the button (V) to the left to start the impulses. A few seconds can be necessary for the priming of the circuit.
– Turn the button to its initial position to stop.

After each operation, wipe the steam tube with a damp cloth, then briefly turn the button (V) to the left to get rid of any liquid left in the tube.
Never leave the steam tube immersed in a liquid, when the machine is not in use.

When the light "tank level" lights, it isn't possible to use the machine any more. So it is necessary to fill the tank to be able to use again the machine.

DAILY MAINTENANCE

Attention: Do not use pressure sprays or hoses to clean the machine. Likewise, the machine must never be immersed in a liquid.

On each end of use, the different parts must be cleaned as follows:

- **Coffee infusion assembly (Fig. 2)**

– Infuse 2 or 3 cycles but without coffee to clean the whole unit.
– Remove the filter-holder (C), the filter assembly (B) and the spout (E) (Fig. 2).
– Clean separately each part.
– Reassemble all parts carefully.

- **Steam tube**

After each use, clean the steam tube with a wet rag and turn the steam button for a short moment to eliminate the small amount of milk inside the tube.

- **Waste drawer and grid**

Both must be carrefully rinsed to remove all traces of coffee oils. The drawer can be rinsed with hot water (60°C maximum) with household dishwash liquid. The grid can be washed in a dishwasher.

- **Body work**

Before cleaning body work, Put the switch (F) on position "0".

Use only a soft cloth and non-abrasive cleaning liquid for all metal and plastic parts.

- **Water tank**

The tank must be cleaned daily, using only food-grade products.

Wipe the silicone tubes with a soft cloth.

Water in the tank must be changed daily. Preferably use a water of low mineral salt content.

PULY CLEANER BABY

In order to increase the use long life, to maintain the best performances of your machine, and to avoid an untimely complete scaling, please start a cycle of scaling at least each 500 coffee cups.

- The machine switched on, empty the tank, then melt the PULY CLEANER BABY small bag with 1,5 liter of cold water (well mix).
- Place the tank in position in the machine.
- Open the filter-holder cup, place a container under the unit, and turn the button on coffee position letting out about two or three hot water cups.
- Wait 15 minutes keeping the machine hot.
- Operate again the pump at regular intervals of about 1 minute until the level control light is lighting, press on the tank in order to suppress the low level safety, and operate the pump until the tank is empty.
- When this operation is finished, rinse carefully the tank, put 3 liters of clean water, and operate the pump intermittently until the water safety is starting.
- Empty again the tank and fill it with clean water, the machine is ready.

TROUBLE SHOOTING

- NO COFFEE:

  WHEN TURNING THE SELECTING BUTTON TO MAKE COFFEE, NOTHING IS HAPPENING.

  - Check if there is water in the tank (the water lack light may be burnt out)

  - If there is water, control the functioning of the water lack microruptor ref. PN0340. By pressing and raising the tank, the light must be extinguished and enlightened.

  - Check the microruptor of the distributor ref. PN0340. It must start the pump ref. PN0620 and open the electrovalve ref. PN1310.

- COFFEE QUALITY:

  - Check the temperature adjustment, coffee must not be too cold ("white") or too hot ("black") without cream

  - Control the pump flow, it's necessary to get at least 10 cl in 20 seconds
  - Check the 3-way electrovalve ref. PN1310 ; if it leaks during infusion, the pressure goes down and the overflow tray is untimely filling.

  - Check there is no water going back to the tank during infusion, if it is the case that's a leak of the distributor decompression valve.
    The infusion pressure is going down and the coffee quality too.

  - The heat exchanger ref. PN1290 is partially blocked, the passage is reduced, the flow decreases, the thermic conduction is less good.

  - Check the fringe filter of pump sucking ref. PN0650 in the tank.

  Coffee is completely cold.

  - The heat exchanger does not heat any more.
  - Check the heating element ref. PN1290
  - Control the thermofuses ref. PN1750 or PN1751 (blue wire) and ref. PN1752 or PN1753 (brown wire)
  - Check the probe ref. PN1250, the temperature control card ref. PN0490.

- NO HOT WATER:

  WHEN TURNING THE SELECTING BUTTON TO PRODUCE HOT WATER, NOTHING IS HAPPENING.

  - Control the same points as when it is not possible to make coffee, i.e. water in the tank, tank microruptor ref. PN0340 and microruptor ref. PN0340 of the ceramic tap.

NO STEAM:

* If the boiler is hot, but nothing is going out:

  - Check the steam switch ref. PN0950
  - Check the pump ref. PN0890
  - Check the fringe filter of steam pump sucking in the tank
  - Check if the electronic circuit ref. PN0510 is sending pulses.
  - Check the 3-way electrovalve ref. PN1310.

* If the boiler is cold, cold water is going out by the steam outlet:

Check
- the heating element ref. PN0771
- the thermofuses ref. PN1970 or PN1971
- the thermostat 150°C ref. PN0880

* If when heating the milk the foam is not taking form:

- Check the little hole at the top of the teflon steam outlet ref. PN1110

TEMPERATURE ADJUSTMENT OF THE COFFEE HEAT EXCHANGER

- Switch off the machine before introducing the adjusting key in the potentiometer located on the temperature control card ref. PN0490
- The temperature is increased by turning anti-clockwise, it is decreased by turning clockwise (Be careful that the potentiometer is very sensitive).
- During the first heating of a machine, an important thermic impulse is producing. The heat exchanger can reach 120°C. Before adjusting temperature, let the machine become stable and make water go through to start heating again.
- **Directions for operating:**
  - The thermometer must be placed directly at the outlet of the coffee spout ref. PY7066.
  - As the filter-holder is closed and without coffee, make flow around 5 cl of water by turning the selecting button to the right.
  - The maximum temperature pointed during flowing must be 87° C ± 3°C.
  - If it is not the case, adjust the potentiometer and repeat the operation.
- **NOTA :**

  When exchanging an electronic probe, put always some special white paste between this and the heat exchanger.

ADJUSTMENT OF PULSES FOR STEAM

- Switch off the machine before introducing the adjusting key in the potentiometer located on the electronic card ref. PN0510.
- The number of pulses is increased by turning clockwise, it is decreased by turning anti-clockwise.
- More the number of pulses is increased, less the steam is dry and less the foam will be fine, but the time taken to get cream will be shorter.

DIS-ASSEMBLING OF THE COFFEE HEAT EXCHANGER

- The heat exchanger can be completely taken off by unscrewing under the screws located under the "nose" of the machine, beside the infusion head which maintain it at the frame. This operation is necessary when dis-assembling the 3-way electrovalve.
- When operating on the heat exchanger to change the heating lement, some gaskets, or dis-assemble the mobile piston, the unit can remain on the frame. So only the upper part is dis-assembled by unscrewing the 5 screws which join the 3 elements of the heat exchanger together – base, heating element, cover
- Note that the mobile piston is composed of a piece in aluminium ref. PY4090 and a stainless steel axle ref. PY4093. The two pieces must be stuck together with Loctite 601 glue and well tight.
- When re-assembling the piston closing screw ref. 53310, use Loctite 243 glue.

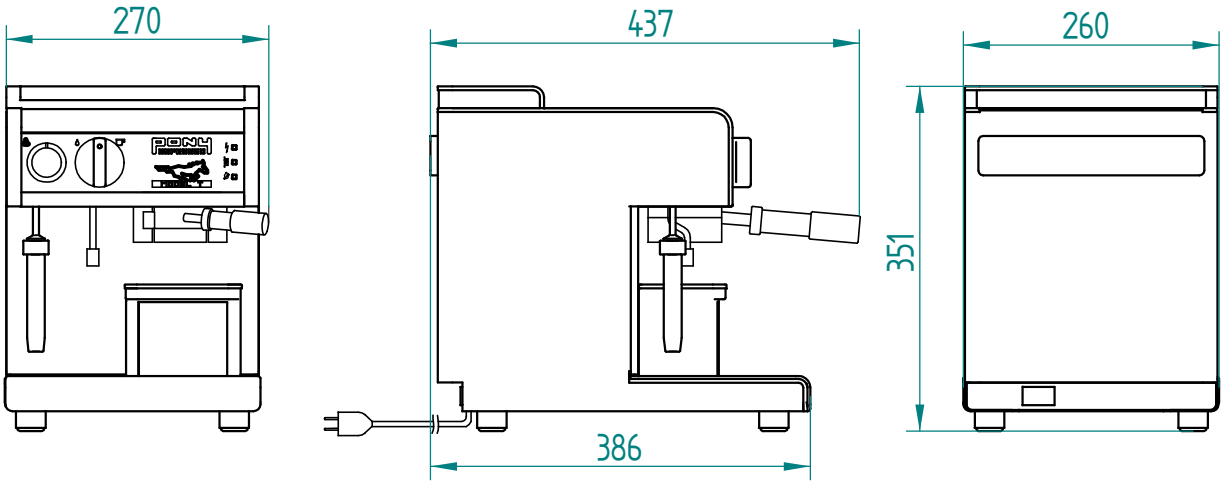

MODELE / MODEL	VOLT	Hz	kW	A	POIDS / WEIGHT
PONY T 134 (CAFE – VAPEUR – EAU CHAUDE) (COFFEE – STEAM – HOT WATER)	120 V	60 Hz	1800 W	15 A	15 Kg

CAPACITES / CAPACITY	
RESERVOIR / WATER TANK	4 Lit.
BAC RECUPERATEUR CARTOUCHES USED POD BOX	12 CARTOUCHES / 12 PODS
BASSINE / OVERFLOW TRAY	0,8 Lit.

PLANCHE / PLATE : 20

N°	CODE	DESIGNATION	QTE
10	PN0010	Carrosserie peinte / Painted body	1
20	PY7064	Boîte à pod / Pod box	1
25	45902	Autocollant boite a pod PONY T / Sticker Pod box	1
30	PN0030	Couvercle réservoir noir / Black tank cover	1
40	PN0040	Chauffe-tasses / Cup-warmer	1
50	PN0050	Vis Parker 3,5x16 / 3,5x16 Parker screw	6
60	PN0060	Devant / Front panel	1
70	PN0070	Raidisseur avant / Front stiffener	1
80	PY7050	Bassine / Overflow tray	1
90	PY2064	Grille de bassine / Overflow tray grid	1
110	PY7098	Enjoliveur droit / Ornemental right side	1
120	PY7099	Enjoliveur gauche / Ornemental left side	1
135	PN0135	Vis Parker 2,9x9,5 TSP TC brunie / Browned 2,9x9,5 screw	2
140	PN0140	Dissipateur thermique / Thermic dissipator	1
150	PH-32	Rondelle plate Z 6 / Washer	2
155	PN0155	Rondelle plate 6,5x18x1,5 zinguée blanc / White washer (zinc)	2
160	AE-13A	Ecrou hexagonal M6 (UNI5588) / Nut stainless M6	4
170	PY7053	Plaque cache aération / Plastic back plate	1
180	45901	Autocollant arrière PONY T / Sticker back	1
195	PN0195	Ecrou rapid 3 / Nut	3
200	40100	Câble d'alim 3x14AWG avec prise 125V/ Feeding wire + 125V plug	1
210	42000	Passe câble d'alimentation / Cable clamp	1
220	PN0220	Entretoise hexagonale / hexagonal brace	4
230	PN0230	Pied caoutchouc / Rubber foot	4
240	43400	Interrupteur général / Switch 2x16A UL	1
250	PN0250	Plaque de fond peinte / Painted bottom sheet	1
260	PN0260	Mod avant peint "café eau vapeur" / "coffee water steam" front	1
270	PN0270	Vis TC M6x8 / M6x8 screw	2
275	PN0275	Passe cable / Cable clamp	1
470	PG-14	Ecrou hexagonal M4 (zingué) / Hexagonal nut (zinc)	2
475	PN0475	Rondelle plate 5X15X1,5 / 5x15x1,5 washer	2
1810	PN1810	Rondelle spéciale 4X12X1 zinguée / Special washer (zinc)	2

06/02

MODELE PONY T 134

PONY ESPRESSO

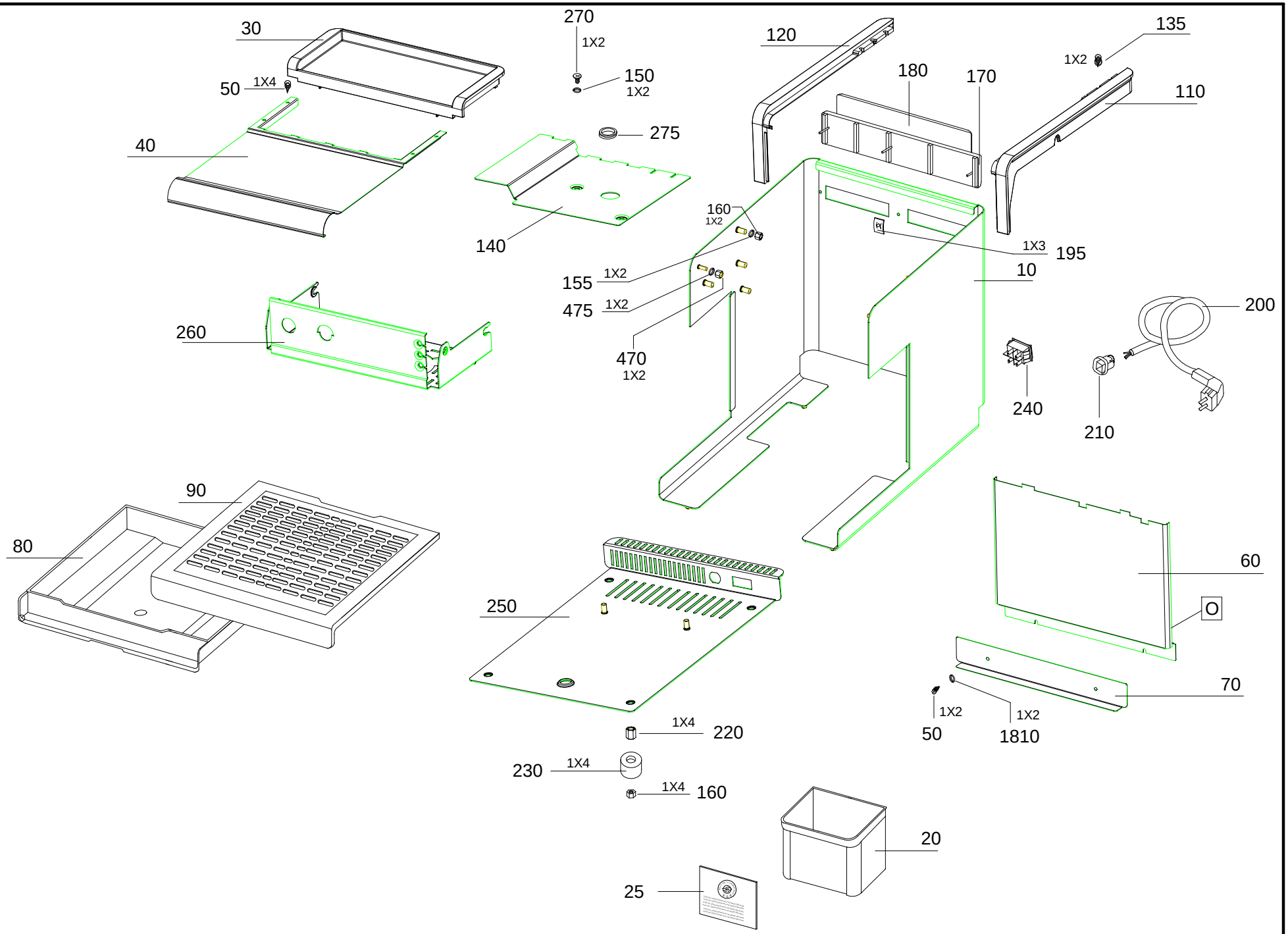

N°	CODE	DESIGNATION	QTE
155	PN0155	Rondelle plate 6,5x18x1,5 zinguée blanc / White washer (zinc)	2
160	AE-13A	Ecrou hexagonal M6 (UNI5588) / Nut stainless M6	2
280	PN0280	Réservoir d'eau (fumée) / Water tank (smoke)	1
290	PN0290	Carter intérieur / Internal casing	1
295	PN0295	Profil en caoutchouc T33 / Rubber profile	1
300	CN-30	Vis TC M3x16 zingué / Screw M3x16	2
310	CN-342	Rondelle dentelée ∅ 3 / Lock washer ∅ 3	2
320	PN0320	Isolant micro-interrupteur / Microswitch insulator	1
330	PG-49	Ecrou hexagonal M3 / Nut M3	6
340	PN0340	Minirupteur E.P.E. (AM51612C79) / EPE Miniruptor	1
350	PN0350	Passe fil et porte bloc connexion/ Wire clamp & plug support	1
360	PN0360	Vis autoforeuse TC 3,5x14,5 pour porte bloc/ plug support screw	2
370	PN0370	Bloc de connexion pour 3 fils / Plug for 3 wires	1
380	PN0380	Vis Parker 3,5x20 TC zinguée blanc / 3,5x20 screw (zinc)	2
390	PN0390	Patte porte réservoir / tank support fastening	1
400	PN0400	Vis M4x8 TH en laiton / Brass M4x8 screw	2
420	CN-343	Rondelle dentelée ∅ 4 / Washer 4	2
430	PN0430	Ecrou hexagonal en laiton de M4 / M4 brass nut	2
450	PN0450	Equerre supérieure des cartes électroniques/ Card upper square	1
470	PG-14	Ecrou hexagonal M4 zingué / Nut M4	2
480	PN0480	Boîtier porte carte espresso cappuccino / Card support box	2
490	PN0491	Carte contrôle temp. 1/6.1B.120V / Temp. control card	1
500	PN0500	Vis Parker TC 3,5x9,5 / 3,5x9,5 TC screw	2
510	PN0511	Carte électronique 120V pompe NME / Pump 230V elec. card	1
520	PN0520	Entretoise pour carte / Brace for card	2
530	PN0530	Ressort manque d'eau / Water lack spring	1
560	PN0560	Cosse mâle laiton / Brass male spade terminal	2
570	PN0570	Plaque fixation pompe montée / Pump fixing plate	2
575	PN0575	Vis TC (TSP) M4x12 zinguée / M4x12 TSP screw (zinc)	4
580	PN0580	Vis TC (TC) M4x12 zinguée / M4x12 TC screw (zinc)	2
585	PN0585	Vis TC (TSC) M4x8 INOX / Stainless steel M4x8 TC screw	2
620	PN0620	Pompe 230V 50Hz type EX4 / 230V 50Hz Pump type EX4	1
620	PN0621	Pompe 120V 60Hz type EX4 / 120V 60Hz Pump type EX4	1
630	PN0630	Caoutchouc support pompe / Pump support rubber	2
650	PN0650	Filtre crépine / Fringe filter	1
655	PN0655	Joint torique ∅ tore 1 X 14 / Gasket ∅ tore 1 X 14	1
1300	PN1305	Raccord coudé à 90° G1/8 conique / Fitting-1/8-L	1
1840	PN1840	Pied SJ5023 noir / Black foot SJ5023	5
1850	PN1850	U support 2 pompes / 2 pumps support	1
2580	PN2580	Sécurité thermique pompe 90°C / pump thermic safety	2
2700	PN2700	Tôle support relais / Relay sheetmetal	1
2710	PN2710	Relais JQX13F A120-2Z5 / Relay	1
2720	PN2720	Vis TC M3 x 8 zinguée / M3 x 8 TC screw (zinc)	2

MODELE PONY T 134

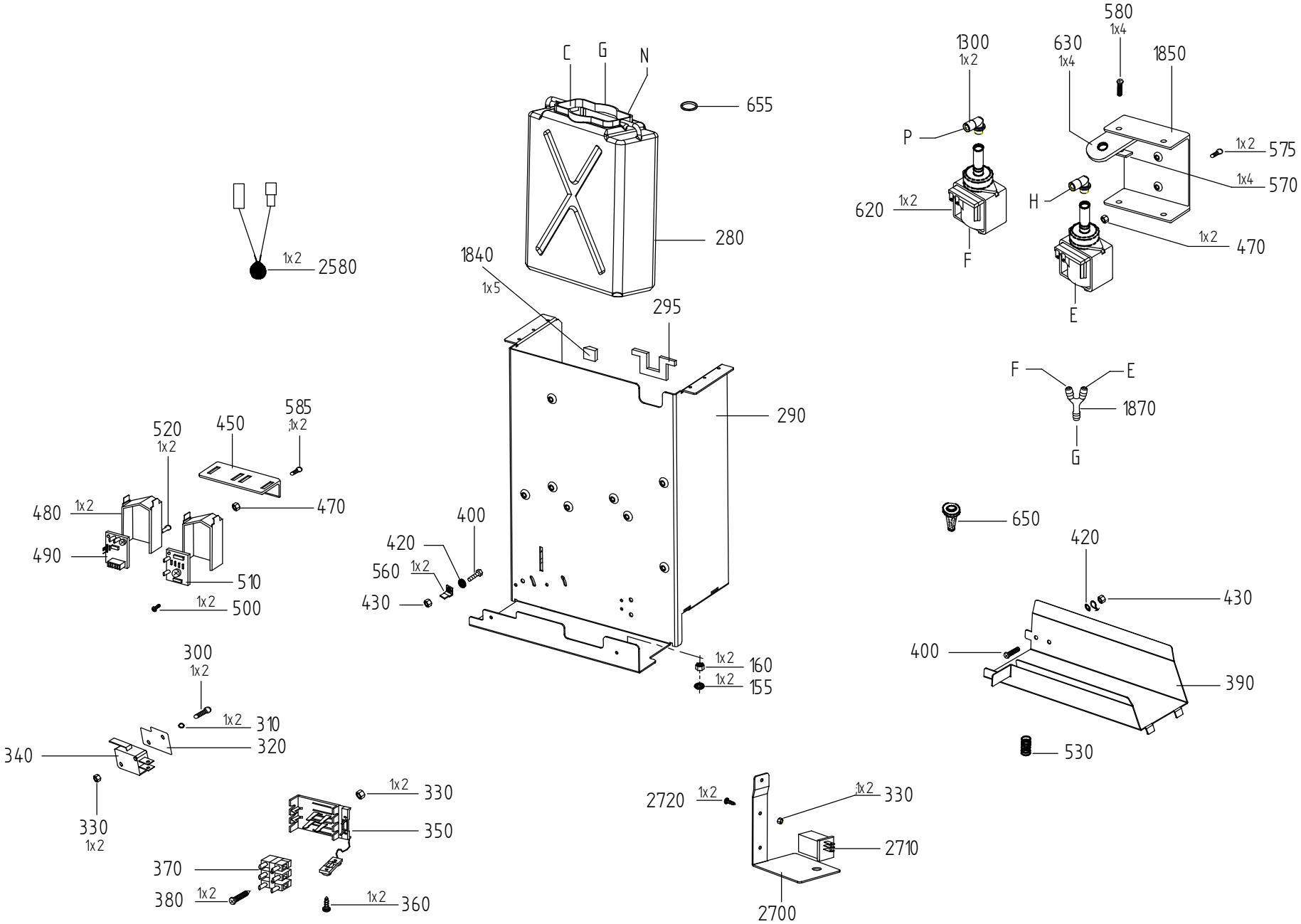

N°	CODE	DESIGNATION	QTE
130	PN0130	Vis Parker 2,9x9,5 TC nickelée / Nickel-plated 2,9x9,5 screw	2
150	PH-32	Rondelle plate Z 6 / Washer	6
160	AE-13A	Ecrou hexagonal M6 (UNI5588) / Nut Stainless M6	6
190	PG-125	Ecrou rapid 2,5 / Nut-Faston	2
340	PN0340	Minirupteur E.P.E. (AM51612C79) / EPE Miniruptor	1
400	PN0400	Vis M4x8 TH en laiton / Brass M4x8 screw	1
420	CN-343	Rondelle dentelée ∅ 4 / Washer 4	1
500	PN0500	Vis Parker TC 3,5x9,5 / 3,5x9,5 TC screw	3
560	PN0560	Cosse mâle laiton / Brass male spade terminal	2
580	PN0580	Vis TC (TC) M4x12 zinguée blanc / M4x12 TC screw (zinc)	4
615	PN0615	Joint torique 2037 Viton / Viton gasket	1
700	CN-344	Rondelle dentelée ∅ 5 / Lock washer 5	2
920	PN0920	Bouton de sélection café/vapeur / Coffee/steam button	1
930	PN0930	Barre anti torsion / Against torsion bar	1
940	45950	Autocollant café/eau/vapeur PONY T / Coffee/water/steam sticker	1
1070	PN1070	Distributeur café/eau chaude / Coffee/hot water distributor	1
1230	PN1230	Vis TC M5x12 / M5x12 TC screw	3
1240	PN1240	Vis TC Parker 3,9x9,5 (Nickelée) / 3,9x9,5 screw (nickel-plated)	1
1250	PN1250	Sonde EB1516 (KTY 10-5+2 calottes) / EB1516 probe	1
1260	PN1260	Ecrou borgne spécial pour chaudière / Blind nut for boiler	4
1270	PN1270	Couvercle d'échange de chaleur / Heat exchange cover	1
1280	PN1280	Joint rectangle (silicone) EK005 / Right-angled joint (silicone)	1
1290	PN1291	Plaque de résistance 120V / 120V heating element plate	1
1300	PN1305	Raccord coudé à 90° G1/8 / Fitting – 1/8 - L	1
1310	PN1311	Electrovanne 120V 60Hz (B397EVE3 2400) / 120/60 electrovalve	1
1330	PN1330	Raccord électrovanne chaudière / Boiler electrovalve fitting	1
1340	27714	Joint torique ∅ 16,6x1,78 (silicone) / Gasket 1,78x16,6	1
1341	PN1341	Anneau élastique pour raccord rapide / fitting ring	1
1342	PN1342	Raccord rapide coudé à 90° M8x1 conique / Rapid fitting M8x1 L	1
1350	PN1350	Raccord droit G 1/8 / 1/8 right fitting	2
1360	PY4094	Base du groupe / Unit base	1
1370	PN1370	Joint ovale (silicone) EK006 / Oval gasket (silicone) EK006	1
1380	CH-64	Ecrou hexagonal serrage colonne 2N Hu 10 / Nut M10	2
1390	53310	Vis fermeture piston chaudière / Closing screw of boiler piston	1
1400	28800	Ressort inox 12,19x12,70x1,88 / Spring 12,19x12,70x1,88	1
1410	CV-20	Joint torique 3,53x66,68 (FKM) / Gasket 3,53x66,68	1
1420	PY4093	Vis fixation piston mobile / Fixing screw of mobile piston	1
1425	CN-698	Goupille cannelée 2x10 inox / Pin 2x10	1
1430	PY4090	Piston mobile / Mobile piston	1
1440	PY7002	Joint de coupe / Gasket unit	2
1450	083500	Douchette inox / Spray	1
1460	PN1460	Vis spéciale fermeture chaudière / Boiler closing screw	4
1480	PY4042	Rondelle conique 17,5x6,5x4 / Washer 17,5x6,5x4 conic	1
1490	CN-128	Vis inox TF 4x8 / Screw M4x8	1
1500	PY4044	Vis épaulée M6 diam. 6,6 L:12 / Screw of turning support	1
1510	PY4043	Butée pour support de coupe / Stop for turning support	1
1520	CN-436	Joint torique 1,78x8,73 EPDM / Gasket 1,78x8,73	1
1530	PY4040	Vis baïonnette / Screw bayonet	2
1540	PN1540	Vis fermeture chaudière postérieure/ Boiler back closing screw	1
1780	PN1780	Isolant MYLAR 65X60 Ep.0,19 / MYLAR insulator	1
1810	PN2810	Rondelle 4x12x1 spéciale zinguée / 4x12x1 washer	1
2820	PN2820	Tôle maintien thermostat / thermostat sheetmetal	1
2830	PN2830	Thermostat 85°C n.c. / thermostat 85°C	1

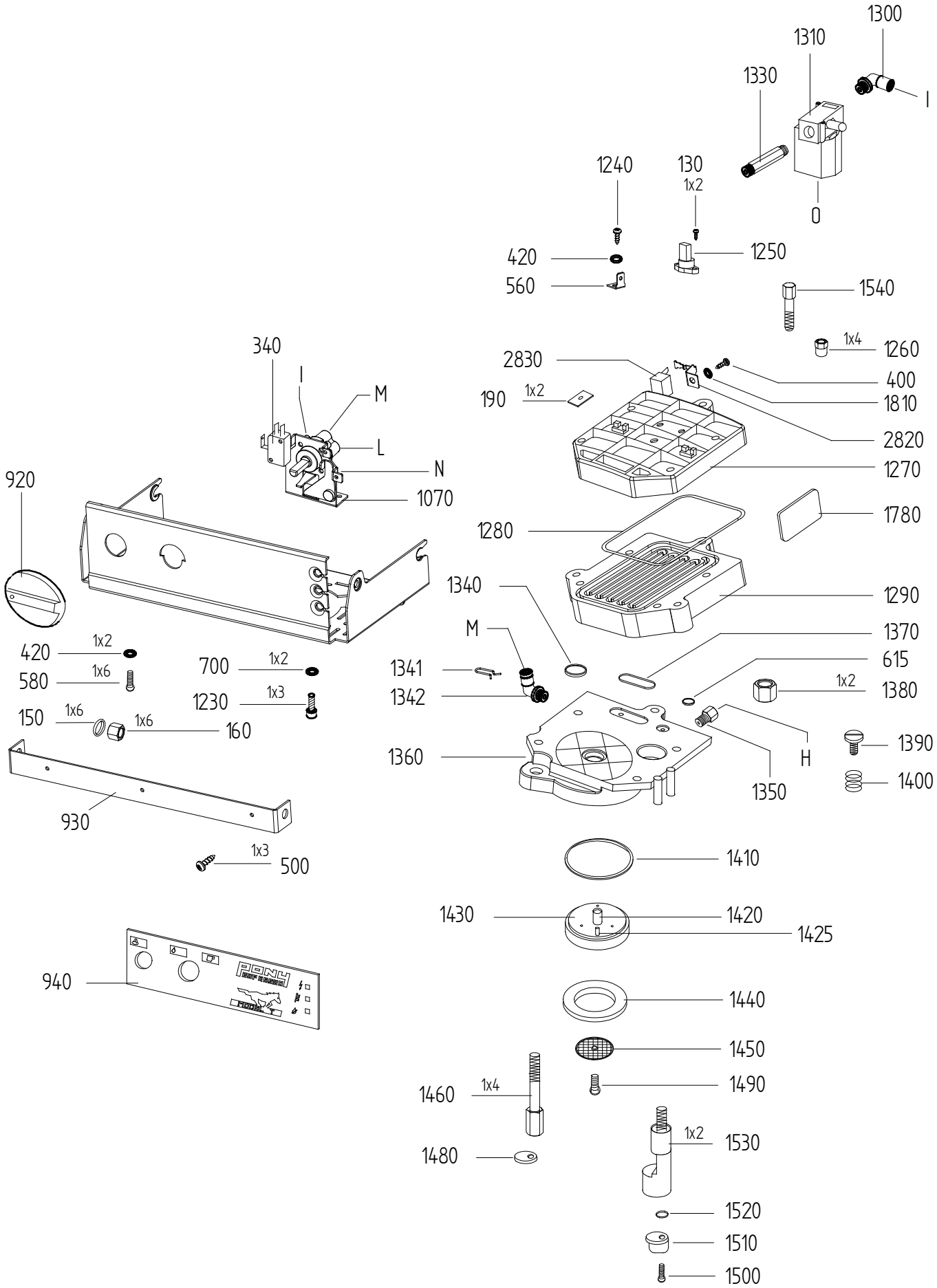
1300
1310
1330
I
O
1240
130
1x2
420
560
1250
1540
1x4
1260
2830
400
190
1x2
1810
2820
1270
340
I
M
L
N
1070
920
1780
1280
1340
1290
M
1370
615
420
1x2
580
1x6
700
1x2
1341
1342
1x2
1380
1230
1x3
150
1x6
1x6
160
1360
H
1390
1350
1400
930
1x3
500
1410
1430
1420
1425
940
1440
1450
1460
1x4
1490
1480
1x2
1530
1520
1510
1500

N°	CODE	DESIGNATION	QTE
1130	33402	Filtre N°2 ILLY / Filter 33mm N°2	2
1140	PY7063	Entonnoir / Funnel	1
1145	DO-197A	Bouchon de nettoyage / Cleaning cap	
1150	33002	Adaptateur filtre ILLY / ILLY filter adaptor	1
1160	27800	Joint torique 2,62x52,07 (NBR) / Gasket 2,62x52,07	1
1170	33001	Coupe porte-filtre chromée / Filter holder body	1
1180	33005	Poignée de coupe / Handle of filter holder	1
1190	PY7072	Doigt d'éjection pod / Pin ejector	1
1200	PY7058	Support tournant complet / Turning support	1
1210	PY7074	Sortie café longue / Whole 1 cup spout for pod	1
1220	PY4041	Vis épaulée M6 diam. 6,6 L 12 / Screw M6 diam. 10x45	1
1550	PN1550	Tube TEFLON ∅ 4-2 L:150 avec olive + écrou / Teflon tube ∅ 4-2 L:150 with olive-shaped knob + nut	2
1560	PN1560	Tube TEFLON ∅ 4-2 L:270 avec olive + écrou / Teflon tube ∅ 4-2 L:270 with olive-shaped knob + nut	1
1580	PN1580	Tube silicone ∅ 8-4 lg:200 / Silicone tube ∅ 8-4 lg: 200	1
1590	PN1590	Tube silicone ∅ 6-3 lg:380 / Silicone tube ∅ 6-3 lg: 380	1
1740	33404	Filtre n°3 ILLY / ILLY filter 35mm	1
1745	33400	Filtre N°1 ILLY / Filter 33mm N°1	
1750	PN1751	Thermofusible câble bleu 167° 120V / Blue thermofuse 167° 120V	1
1760	PN1753	Thermofusible câble marron 167° 120V / Brown thermofuse 167° 120V	1
1790	PN1790	Câblage voyants complet + clips / Whole lights wiring + clips	1
1860	PN1860	Tube silicone ∅ 8-4 lg: 160 / Silicone tube ∅ 8-4 lg: 160	1
1870	PN1870	Raccord Y pour tube ∅ 8-4 / Y fitting for tube ∅ 8-4	1
1940	PN1940	Tube silicone ∅ 8-4 L:220 / Silicone tube ∅ 8-4 L:220	3
1950	PN1950	Raccord droit percé pour tube ∅ 8-4 / Right fitting cut for tube ∅ 8-4	3
1960	PN1960	Tube silicone ∅ 8-4 L:265 / Silicone tube ∅ 8-4 L:265	3
2680	PN2680	Ressort anti pli L :72 D.i. 8.2 / Spring L :72 D.i. 8.2	1
2900	PN2900	Thermofusible câble bleu 216° 120V / Blue thermofuse 216° 120V	1
2910	PN2910	Thermofusible câble marron 216° 120V / Brown thermofuse 216° 120V	1
2940	PN2940	Tube cuivre 4x0,5 L=45 avec olive + écrou / pipe with olive-shaped knob + nut	1
2950	PN2950	Tube TEFLON ∅ 4-2 L:150 spécial / Special teflon tube ∅ 4-2 L:150	1
2960	PN2960	Tube TEFLON ∅ 4-2 L:140 avec olive + écrou / Teflon tube ∅ 4-2 L:110 with olive-shaped knob + nut	1
2970	PN2970	Tube TEFLON ∅ 4-2 L:110 avec olive + écrou / Teflon tube ∅ 4-2 L:150 with olive-shaped knob + nut	1
2980	PN2980	Tube silicone ∅ 6-4 lg:640 / Silicone tube ∅ 6-4 lg: 640	1

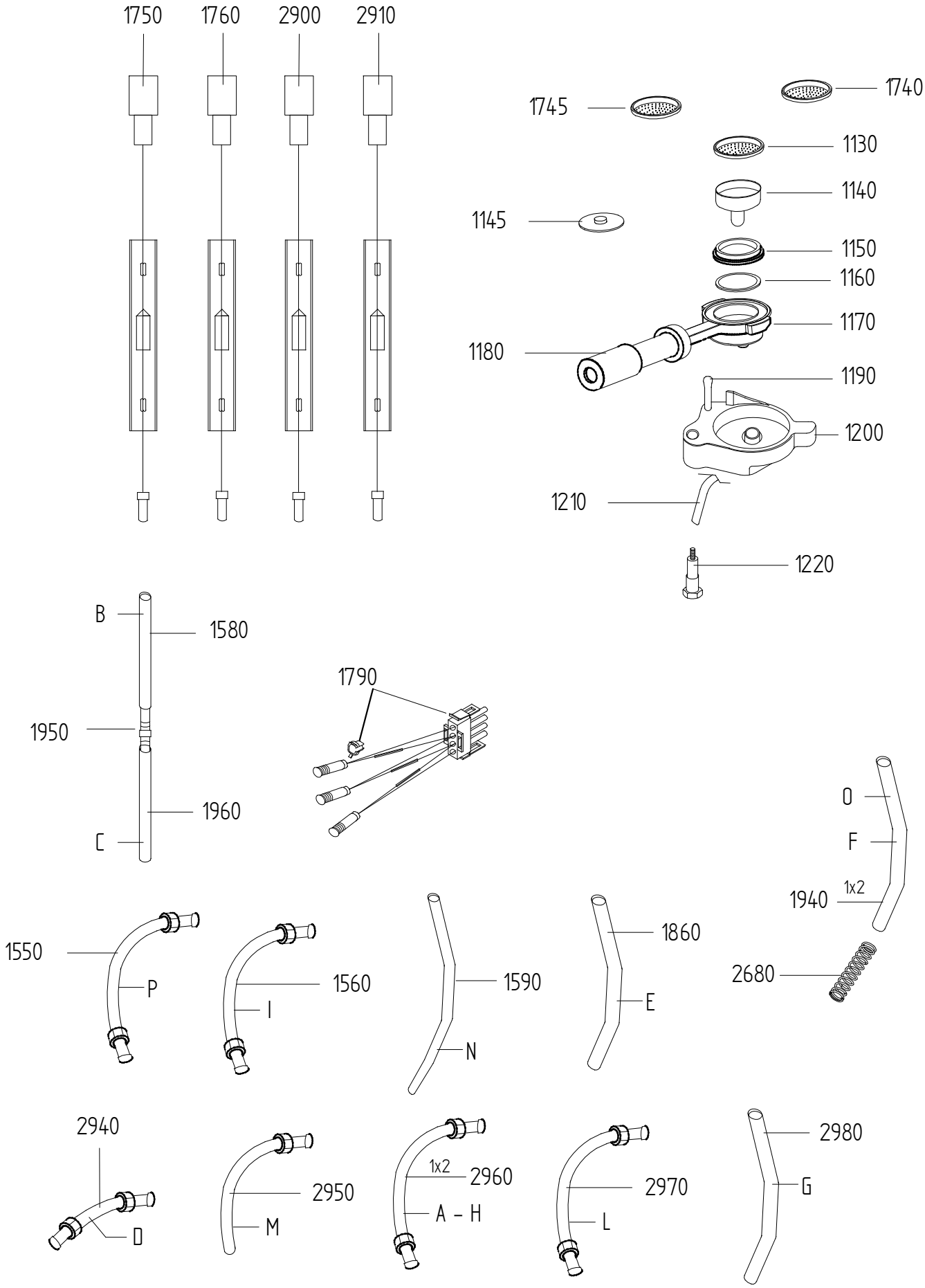
1750
1760
2900
2910
1745
1740
1130
1140
1145
1150
1160
1170
1180
1190
1200
1210
1220
B
1580
1950
1960
C
1790
O
F
1940
1x2
1550
P
1560
I
1590
N
1860
E
2680
2940
D
2950
M
1x2
2960
A - H
2970
L
2980
G

N°	CODE	DESIGNATION	QTE
130	PN0130	Vis Parker 2,9x9,5 TC nickelée / Nickel-plated screw 2,9x9,5	2
330	PG-49	Ecrou hexagonal M3 / Nut M3	1
400	PN0400	Vis M4x8 TH en laiton / Brass screw M4x8	1
410	PN0410	Rondelle plate Z3 / Flat washer	2
420	CN-343	Rondelle dentelée ∅ 4 / Washer 4	1
470	PG-14	Ecrou hexagonal M4 zingué / Nut M4	4
590	PN0590	Raccord droit G 1/8 cylindrique / Cylindrical 1/8 right fitting	1
670	CN-189	Vis TC M4x16 zinguée blanc / Screw M4x16	2
680	PN0680	Entretoise pour chaudière vapeur / Brace for steam boiler	2
681	PN0681	Entretoise pour chaudière vapeur L:8mm / Brace for steam boiler L:8mm	2
682	PN0682	Vis M4x25 inox / Inox screw M4x25	1
685	PN0685	Ecrou auto-bloquant M4 / Self-blocking nut M4	2
690	PN0690	Ecrou hexagonal M5 laiton / Brass hexagonal nut M5	6
700	CN-344	Rondelle dentelée ∅ 5 / Lock washer 5	5
720	CF-193	Vis TH M5x35 / Nut M5	4
760	PN0760	Joint torique 2025 en viton / Viton gasket	1
770	PN0771	Résistance à plat pour chaudière 850W 120V / Flat heating element for boiler 850W 120V	1
780	PN0780	Joint torique 79x2 Viton / Viton gasket 79x2	1
790	PN1350	Raccord droit G 1/8 / 1/8 right fitting	1
810	PN0810	Cosse droite mâle en laiton / Brass male right spade terminal	1
820	PN0820	Ecrou borgne H:9,5 pour chaudière/ Blind nut H:9,5 for boiler	1
840	PN0845	Vis TH M5x50 / Screw M5x50	2
850	PN0850	Etrier thermofusible / Thermofuse stirrup	1
860	PN0860	Corps supérieur de chaudière à plat fraisée/ Upper body flat boiler milled	1
870	PN0870	Etrier thermostat haut modifié/ High thermostat modified stirrup	1
880	PN0880	Thermostat 150° NC / Thermostat 150°	1
950	PN0950	Interrupteur rotatif (vapeur) R11A11000 / (steam) switch	1
960	PN0960	Tige de commande inter-rotatif / inter-rotary control rod	1
970	PN0970	Accouplement cannelé pour bouton / Grooved coupling for button	1
980	PN0980	Bouton vapeur avec cannelure / Steam button with groove	1
990	PN0990	Etrier support tube & inter. Vapeur / Stirrup of steam tube support & switch	1
1010	PN1010	Vis spéciale M4x7 / M4x7 special screw	1
1020	PN1020	Ecrou hexagonal 14x3,7mm / Hexagonal nut 14x3,7	3
1030	PN1030	Tube vapeur (chromé) / Chromium-plated steam tube	1
1040	PN1040	Raccord tube vapeur (K.992) / Steam tube fitting	2
1060	PN1060	Rondelle Frein ∅ 12 (DE) / Brake washer ∅ 12	3
1090	PN1090	Joint torique 2043 (silicone) / Gasket (silicone)	1
1120	PN1120	Tube sortie eau chaude (chromé)/ Hot water outlet tube (chrom.)	1
1300	PN1305	Raccord coudé à 90° G1/8 / Fitting – 1/8 - L	1
1880	PN1880	Raccord pour tube décompression électrovanne vapeur / Fitting for steam electrovalve decompression pipe	1
1890	PN1890	Raccord pour sortie décompression électrovanne vapeur / Fitting for steam electrovalve decompression outlet	1
1895	PN1895	Joint pour jonction raccords décompression / Gasket for decompression fittings junction	1
1910	PN1911	Electrovanne 3 voies 120V 60hz (B397CVE32400)/ 3-ways electrov. 120V 60Hz	1
2730	PN2730	Tube cuivre 4x0,5 L=210 avec olive + écrou / pipe L=210 with olive-shaped knob + nut	1
2740	PN2740	Disque chaudière / Boiler disk	1
2750	PN2750	Raccord en L / L fitting	1
2755	PN2755	Etrier support pour chaudière vapeur/ Support stirrup for steam boiler	1
2770	PN2770	Tube sortie vapeur / Steam outlet pipe	1

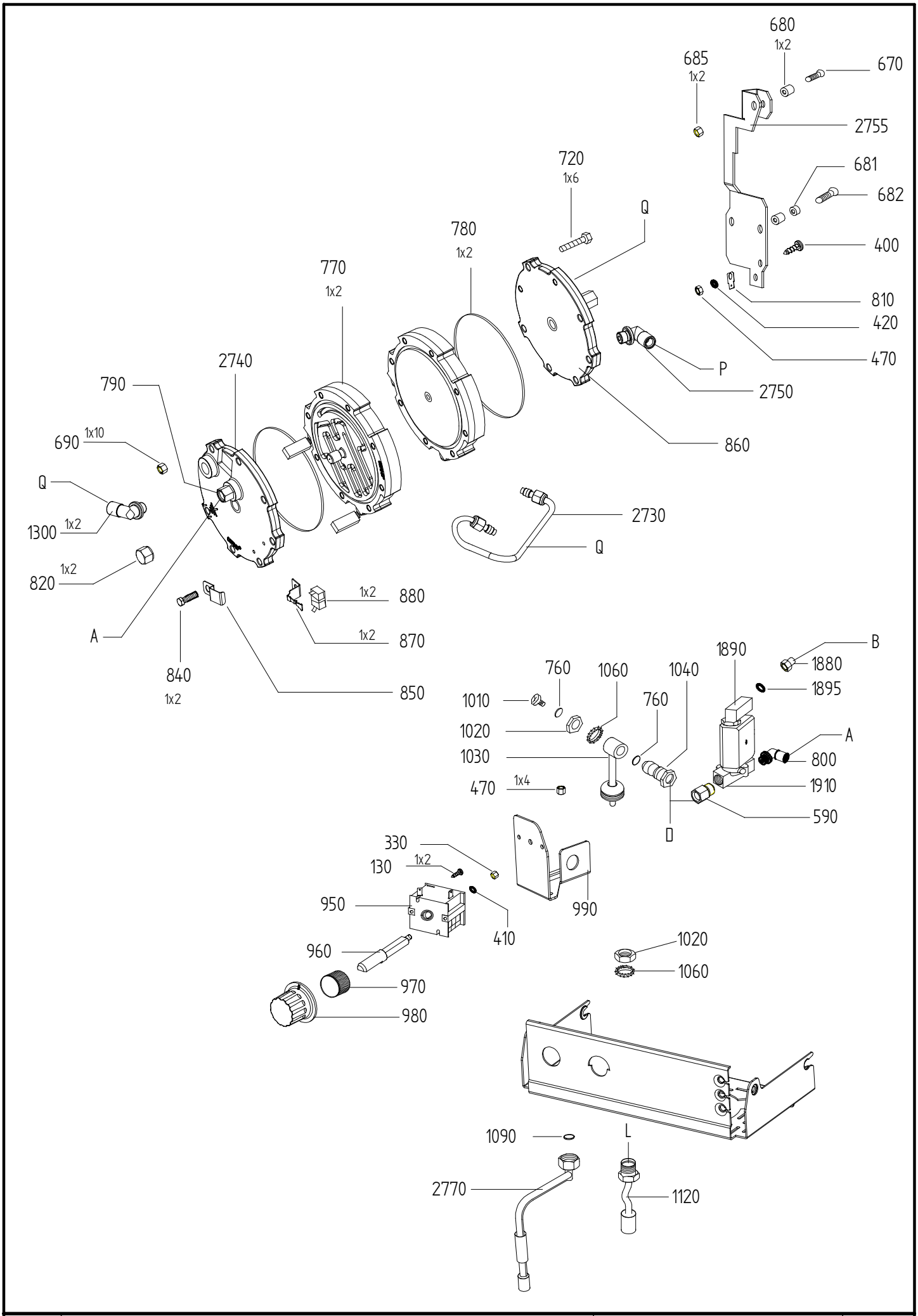
680
1x2
670
685
1x2
2755
720
1x6
681
682
Q
780
1x2
400
770
1x2
810
420
470
2740
P
790
2750
690
1x10
860
Q
2730
1300
1x2
Q
820
1x2
1x2
880
A
1x2
870
840
1x2
850
B
1890
1880
760
1060
1040
1895
1010
760
1020
A
1030
800
470
1x4
1910
590
D
330
130
1x2
950
990
410
960
1020
1060
970
980
1090
L
2770
1120

DIVERS / OTHER ITEMS

N°	CODE	DESIGNATION	QTE
1620	PN2990	Câblage électrique PONY T vapeur 120V UL / Elec. wiring 120V UL steam PonyT	1
1630	PN1633	Chaudière complète PONY T café 120V / Complete boiler 120V coffee PonyT	1
1650	PN1652	Chaudière vapeur assemblée 120V / Assembled steam boiler 120V	1
1710	97047	Livre d'instructions PONY T anglais / PonyT Instructions book	1
1800	PN1800	Piston complet / Complete piston	

LISTE DES COMPOSANTS CHAUDIERE CAFE / LIST OF COFFEE BOILER COMPONENTS
Ref. PN1633
(voir planche n°40 / see plate n°40)

N°	CODE	DESIGNATION	QTE
190	PG-125	Ecrou rapid 2,5 / Nut-Faston	2
615	PN0615	Joint torique (VITON) / Gasket (Viton)	1
1260	PN1260	Ecrou borgne spécial pour chaudière / Blind nut for boiler	4
1270	PN1270	Couvercle d'échange de chaleur / Heat exchange cover	1
1280	PN1280	Joint rectangle (silicone) / Right-angled joint (silicone)	1
1290	PN1290	Plaque de résistance 230V / 230V heating element plate	1
1340	27714	Joint torique ∅ 16,6x1,78 (silicone) / Gasket 1,78x16,6	1
1342	PN1342	Raccord rapide coudé à 90° M8x1 conique / Rapid fitting M8x1 L	1
1350	PN1350	Raccord droit G 1/8 / 1/8 right fitting	2
1360	PY4094	Base du groupe / Unit base	1
1370	PN1370	Joint ovale (silicone) / Oval gasket (silicone)	1
1380	CH-64	Ecrou hexagonal serrage colonne 2N Hu 10 / Nut M10	2
1390	53310	Vis fermeture piston chaudière / Closing screw of boiler piston	1
1400	28800	Ressort inox 12,19x12,70x1,88 / Spring 12,19x12,70x1,88	1
1410	CV-20	Joint torique 3,53x66,68 (FKM) / Gasket 3,53x66,68	1
1420	PY4093	Vis fixation piston mobile / Fixing screw of mobile piston	1
1425	CN-698	Goupille cannelée 2x10 inox / Pin 2x10	1
1430	PY4090	Piston mobile / Mobile piston	1
1440	PY7002	Joint de coupe / Gasket unit	1
1450	083500	Douchette inox / Spray	1
1460	PN1460	Vis spéciale fermeture chaudière / Boiler closing screw	4
1490	CN-128	Vis inox TF 4x8 / Screw M4x8	1
1530	PY4040	Vis baïonnette / Screw bayonet	2
1540	PN1540	Vis fermeture chaudière postérieure/ Boiler back closing screw	1

LISTE DES COMPOSANTS CHAUDIERE VAPEUR / LIST OF STEAM BOILER COMPONENTS
Ref. PN1652
(voir planche n°60 / see plate n°60)

N°	CODE	DESIGNATION	QTE
400	PN0400	Vis M4x8 TH en laiton / Brass screw M4x8	1
420	CN-343	Rondelle dentelée ∅ 4 / Washer 4	1
470	PG-14	Ecrou hexagonal M4 zingué / Nut M4	4
670	CN-189	Vis TC M4x16 zinguée blanc / Screw M4x16	2
680	PN0680	Entretoise pour chaudière vapeur / Brace for steam boiler	2
681	PN0681	Entretoise pour chaudière vapeur L:8mm / Brace for steam boiler L:8mm	2
682	PN0682	Vis M4x25 inox / Inox screw M4x25	1
685	PN0685	Ecrou auto-bloquant M4 / Self-blocking nut M4	2
690	PN0690	Ecrou hexagonal M5 laiton / Brass hexagonal nut M5	6
760	PN0760	Joint torique 2025 en viton / Viton gasket	1
770	PN0771	Résistance à plat pour chaudière 850W 120V / Flat heating element for boiler 850W 120V	1
780	PN0780	Joint torique 79x2 Viton / Viton gasket 79x2	1
790	PN0790	Bouchon laiton 8x1 mâle / Brass male plug	1
820	PN0820	Ecrou borgne H:9,5 pour chaudière/ Blind nut H:9,5 for boiler	1
840	PN0840	Vis TH M5x20 / Screw M5x20	2
850	PN0850	Etrier thermofusible / Thermofuse stirrup	1
860	PN0860	Corps supérieur de chaudière à plat fraisée/ Upper body flat boiler milled	1
1300	PN1305	Raccord coudé à 90° G1/8 / Fitting – 1/8 - L	1
2740	PN2740	Disque chaudière / Boiler disk	1
2750	PN2750	Raccord en L / L fitting	1
2755	PN2755	Etrier support pour chaudière vapeur/ Support stirrup for steam boiler	1

05/02

CIRCUIT HYDRAULIQUE
PONY 134

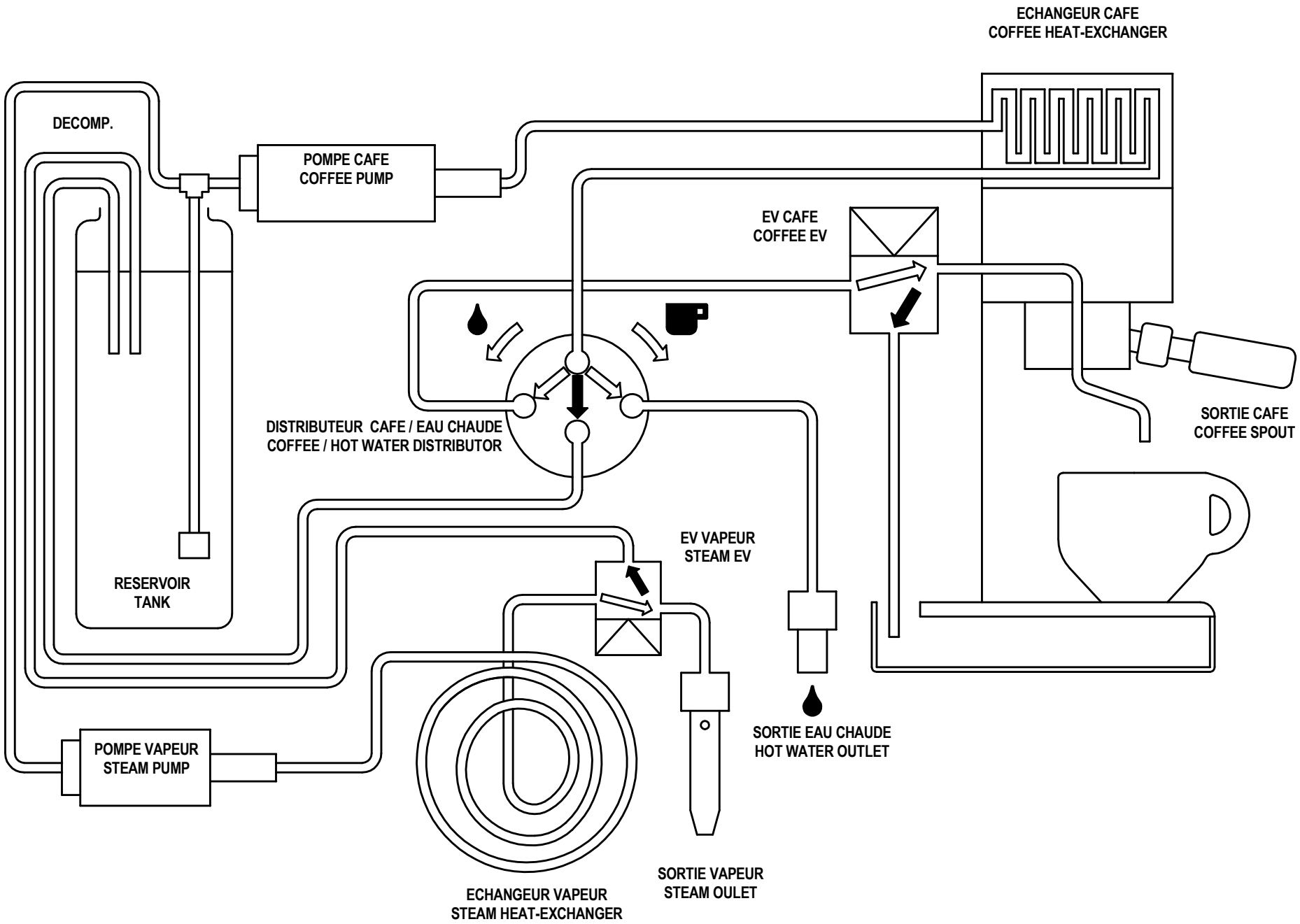

PONY ESPRESSO

06/02

SCHEMA ELECTRIQUE
PONY T 134

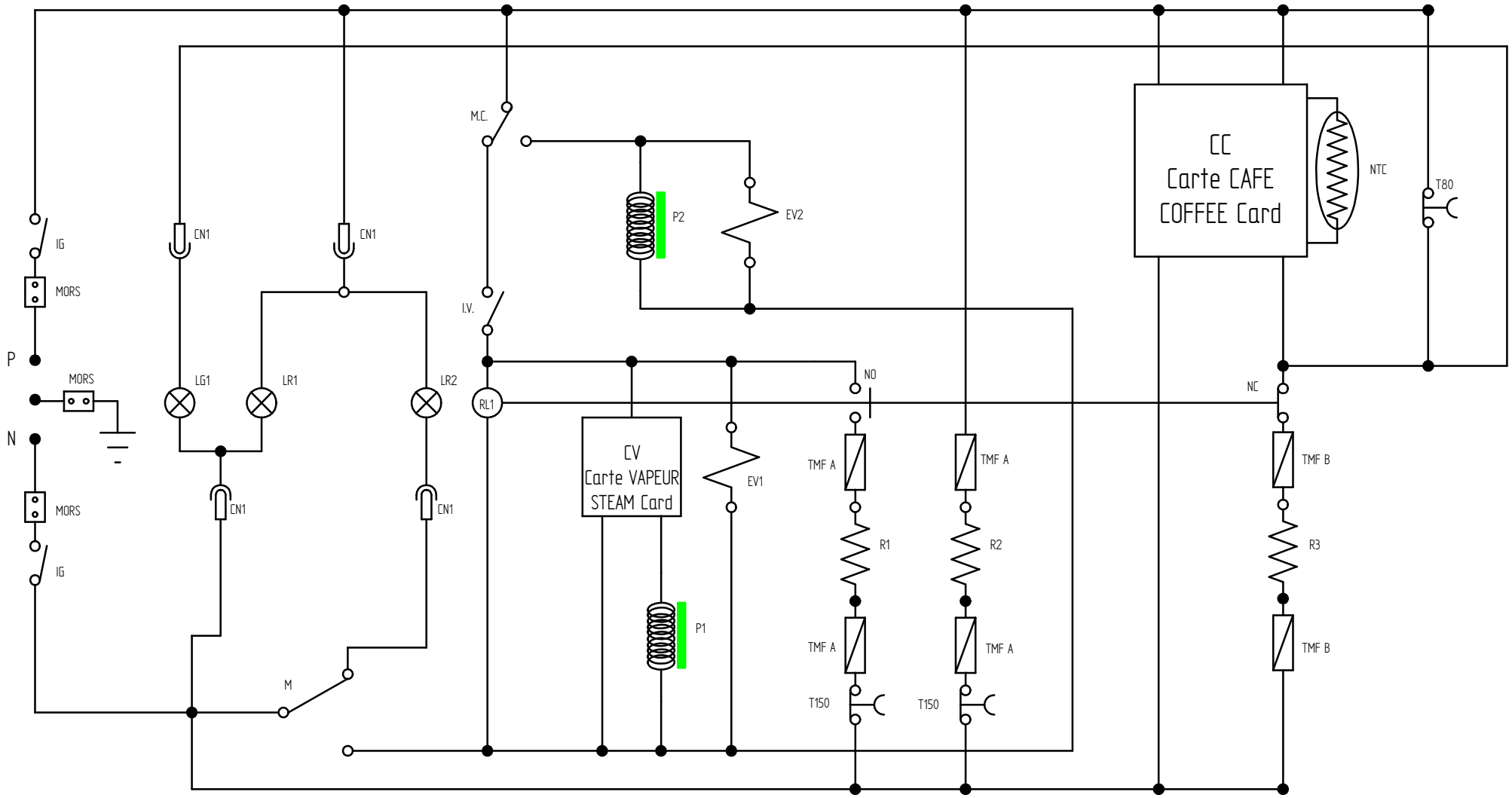

IG	Interrupteur Général / ON-OFF switch	RL1	Relais / Relay	R3	Résistance chaudière café / Coffee heating element
MORS	Bornier / Plug	NO/NC	Contact relais / Relay contacts	T150	Thermostat vapeur150°C / Steam thermostat
CN1	Connecteur lampes / lights connecting	EV1	Electrovanne vapeur / Steam electrovalve	T80	Thermostat café / coffee thermostat
LG1	Lampe jaune résistance / Heating light	EV2	Electrovanne café / Coffee electrovalve	NTC	Sonde thermique / Thermic probe
LR1	Lampe rouge générale / ON-OFF light	P1	Pompe vapeur / Steam pump	TMF A	Thermofusible 216°C / Thermofuse
LR2	Lampe rouge sécurité manque d'eau / Water safety light	P2	Pompe café / Coffee pump	TMF B	Thermofusible 167°C / Thermofuse
IV	Interrupteur vapeur / steam switch	R1	Résistance vapeur 1/ steam heating element 1	MC	Interrupteur café / Coffee switch
CV	Carte électronique vapeur / Steam electronic card	M	Sécurité manque d'eau / Water safety switch		
CC	Carte électronique café / Coffee electronic card	R2	Résistance vapeur 2 / steam heating element 2		

PONY ESPRESSO

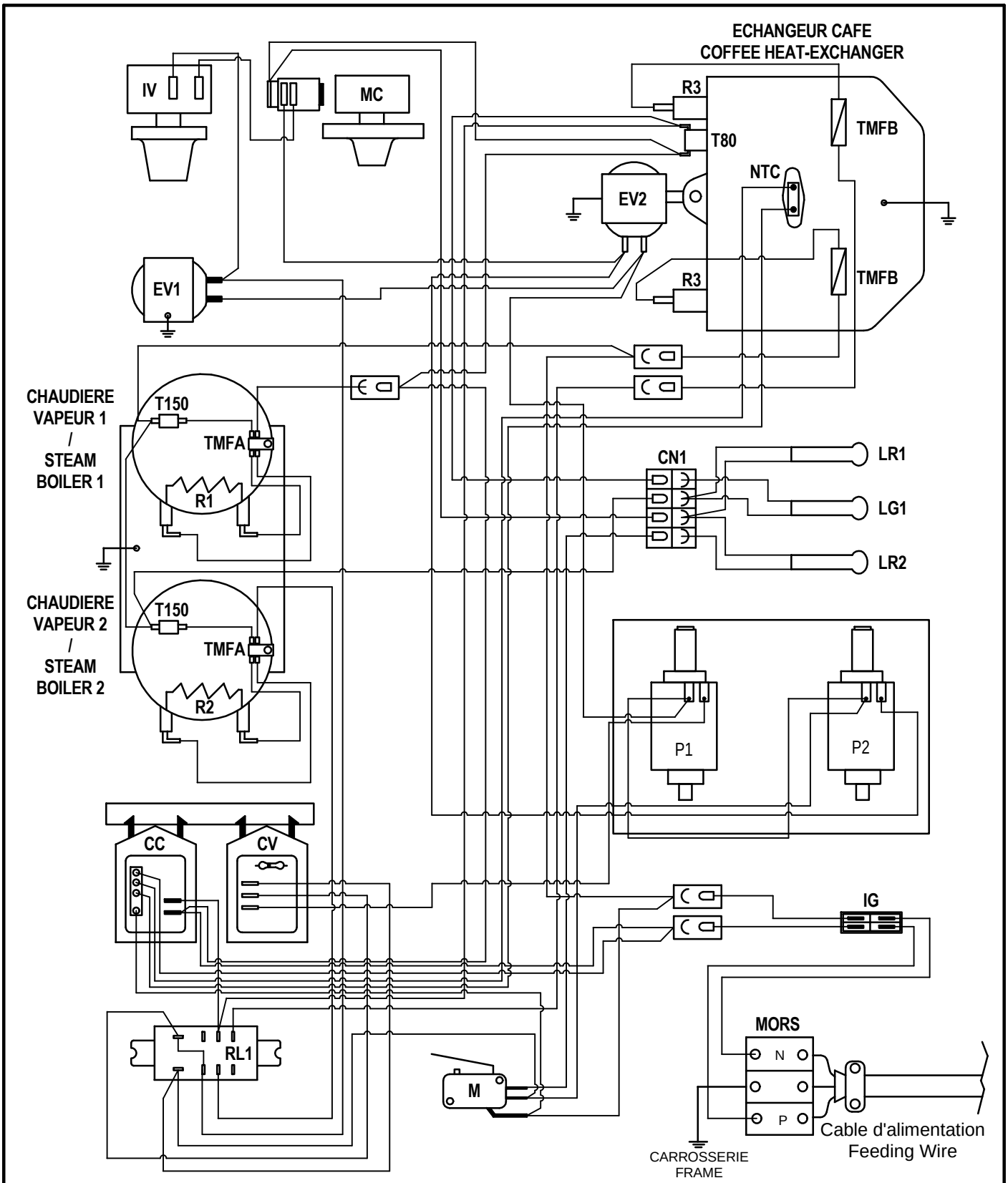

CC	Carte électronique café / Coffee electronic card	MORS	Bornier / Plug
CN1	Connecteur lampes / lights connecting	NTC	Sonde thermique / Thermic probe
CV	Carte électronique vapeur / Steam electronic card	P1	Pompe vapeur / Steam pump
EV1	Electrovanne vapeur / Steam electrovalve	P2	Pompe café / Coffee pump
EV2	Electrovanne café / Coffee electrovalve	R1	Résistance vapeur 1/ steam heating element 1
IG	Interrupteur Général / ON-OFF switch	R2	Résistance vapeur 2 / steam heating element 2
IV	Interrupteur vapeur / steam switch	R3	Résistance chaudière café / Coffee heating element
LG1	Lampe jaune résistance / Heating light	RL1	Relais / Relay
LR1	Lampe rouge générale / ON-OFF light	T150	Thermostat vapeur150°C / Steam thermostat
LR2	Lampe rouge sécurité manque d'eau / Water safety light	T80	Thermostat café / coffee thermostat
M	Sécurité manque d'eau / Water safety switch	TMF A	Thermofusible 216°C / Thermofuse
MC	Interrupteur café / Coffee switch	TMF B	Thermofusible 167°C / Thermofuse

06/02

SCHEMA DE CABLAGE
PONY T 134

UNIC

PONYT 134

FIRST EMERGENCY PER PARTS LIST

LISTE DES PIECES DETACHEES DE 1ERE URGENCE

CODE	DESIGNATION		QUANTITES MACHINES		
			25	50	100
083500	Spray	Douchette inox	2	3	5
PN1340	Gasket Ø tore 1,78 x 18,77 int	Joint torique Ø tore 1,78 x 18,77 int	2	3	5
27800	Gasket Ø tore 2,62 x 52,07 int	Joint torique Ø tore 2,62 x 52,07 int	2	3	5
33400	Filter n°1	Filtre n°1	2	2	4
33402	Filter n°2	Filtre n°2	2	2	4
33404	Filter n°3	Filtre n°3	2	2	4
43400	On/off switch	Interrupteur général	1	2	4
92024	PULY CLEANER BABY	Détartrant PULY CLEANER BABY	3	5	10
CN-436	Gasket Ø tore 1,78 x 8,73 int	Joint torique Ø tore 1,78 x 8,73 int	2	3	5
CV-20	Gasket Ø tore 3,53 x 66,68 int	Joint torique Ø tore 3,53 x 66,68 int	2	3	5
PN0280	Water tank	Réservoir d'eau	1	1	1
PN0340	Micro interrupteur	Micro interrupteur	2	4	6
PN0491	Coffee electronic card	Carte contrôle température 120V	1	2	3
PN0511	Steam elctronic card	Carte électronique 120V pompe vapeur	1	2	3
PN0615	Gasket 20-37 VITON	Joint torique 20-37 VITON	2	2	4
PN0621	Coffee / steam Pump 120V 60Hz	Pompe 120V 60Hz café / vapeur	3	4	7
PN0650	Water filter	Filtre crépine	1	2	2
PN0655	Gasket Ø tore 1 x 14	Joint torique Ø tore 1 x 14	1	2	3
PN0760	Gasket 20-25 viton	Joint torique 20-25 viton	3	6	10
PN0780	Gasket Ø tore 2 x 79 VITON	Joint torique Ø tore 2 x 79 VITON	1	3	5
PN0820	Nut	Ecrou borgne	1	2	3
PN0860	Upper body flat boiler milled	Corps supérieur de chaudière vapeur	1	2	2
PN0880	Safety thermostat	Thermostat de sécurité	1	2	3
PN0920	Coffee / steam button	Bouton de sélection café / eau chaude	1	1	2
PN0950	Steam switch	Interrupteur rotatif	1	2	3
PN0960	Inter-rotary control rod	Tige de commande inter-rotatif	1	1	2
PN0970	Grooved coupled for button	Accouplement cannelé pour bouton	1	1	2
PN0980	Steam button with groove	Bouton vapeur	1	2	2
PN1030	Outlet steam	Tube vapeur nickelé	1	2	3
PN1070	Coffee / hot water distributor	Distributeur café / eau chaude	1	1	2
PN1091	Gasket 6 X 3 SILICONE	Joint torique 6 X 3 SILICONE	1	3	5
PN1250	Thermic probe	Sonde thermique	1	2	3
PN1280	Gasket EK005	Joint rectangle EK005	1	3	5
PN1291	Heating element plate	Plaque de résistance 120V	1	1	1
PN1311	Electrovalve 120V 60Hz	Electrovanne 120V 60Hz	1	2	3
PN1370	Gasket EK006	Joint ovale EK006	1	3	5
PN1550	Tube rislan L : 150	Tube 4-2 L : 150	1	3	5
PN1560	Tube rislan L : 270	Tube 4-2 L : 270	1	2	3

PONYT 134

FIRST EMERGENCY PER PARTS LIST

LISTE DES PIECES DETACHEES DE 1ERE URGENCE

CODE	DESIGNATION		QUANTITES MACHINES		
			25	50	100
PN1580	Tube rislan L : 200	Tube 8-4 L : 200	1	3	5
PN1590	Tube rislan L : 380	Tube 6-3 L : 380	1	2	3
PN1633	Coffee boiler 120V	Chaudière complète café 120V	1	1	1
PN1652	Steam boiler 120V	Chaudière vapeur complète 120V	1	1	1
PN1751	Blue Thermofuse 167°C 120V	Thermofusible câble bleu 167° 120V	1	2	3
PN1753	Blue Thermofuse 167°C 120V	Thermofusible câble marron 167° 120V	1	2	3
PN1790	Lights	Voyants + clips	2	3	4
PN2900	Blue Thermofuse 216°C 120V	Thermofusible câble bleu 216° 120V	1	2	3
PN2910	Blue Thermofuse 216°C 120V	Thermofusible câble marron 216° 120V	1	2	3
PN2940	Pipe L :45	Tube cuivre 4x0,5 L=45	1	2	3
PN2950	Tube rislan L : 150 spécial	Tube ∅ 4-2 L:150 spécial	1	2	3
PN2960	Tube rislan L : 140	Tube ∅ 4-2 L:140	1	2	3
PN2970	Tube rislan L : 110	Tube ∅ 4-2 L:110	1	2	3
PN2980	Tube silicone L :640	Tube silicone ∅ 6-4 lg:640	1	2	3
PY4094	Unit base	Base du groupe	1	1	1
PY7002	Gasket unit	Joint de coupe	2	3	5

THD	Electronic thermometer	Thermomètre électronique	1 per technician
	Loctite 243	Loctite 243	1
	Loctite 601	Loctite 601	1
	Contact grease	Graisse de contact	1