Nina Cappuccino

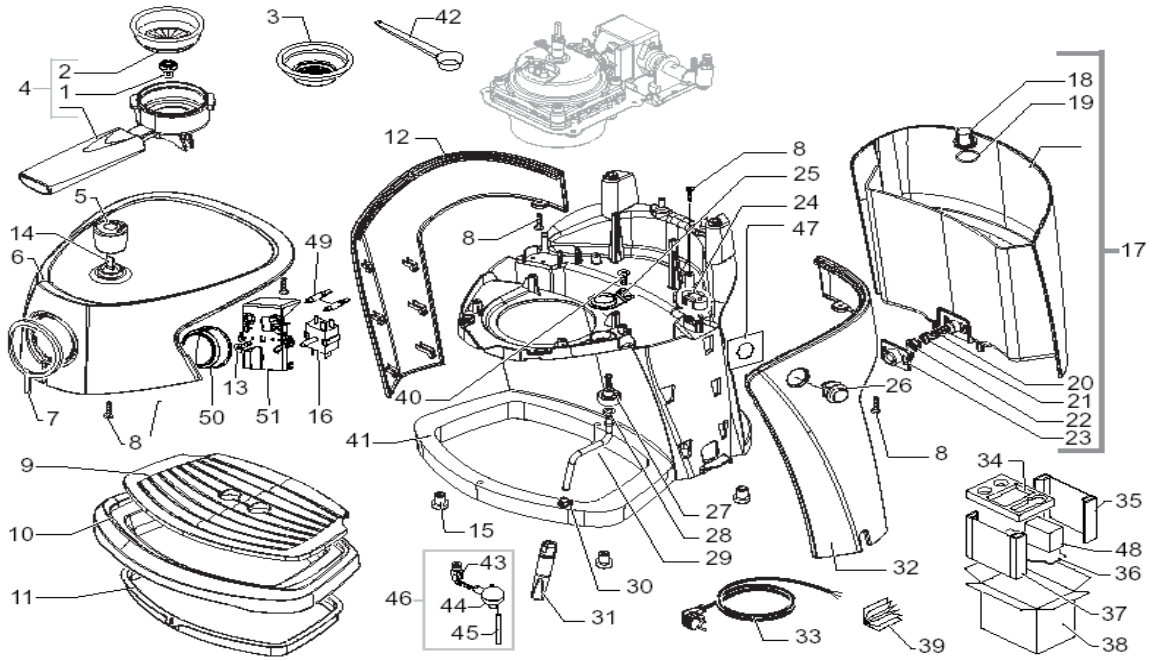

POS	SAECO No.	SIN026X Nina Cappuccino E71072 Rev. 02 Code: 10002574	NOTES	Italy Part No.
Yellow = Not Available unless Special Ordered				
1	4301007000	Support Peg		
2	11007038	Filter, Perfect Crema D.0.6 MM		
3	11011693	One Cuo/ Pod		
4	#N/A	CARBONA FILTERHOLDER P234 ASSY.	See page 4 E90061	11009765
	#N/A	SEE COD.EXP.E90061		
5	#N/A	CARBONA WATER-STEAM KNOB P234		11005799
6	#N/A	SILVER UPPER CASING COVER P234UL S/S.CAP		11009431
	#N/A	SILVER UPPER CASING COVER P234UL S/SCR.		11009432
7	#N/A	TRANSP/ORANGE DRIVERS RING P234		11005885
8	#N/A	SCREW TCBR TORX 10 3,5X14 PLAST.ZN-N		129912504
9	#N/A	SILVER GRATE FOR DRIP TRAY P234		11005787
10	#N/A	CARBONA DRIP TRAY P234		11005786
11	#N/A	CARBONA SPACER FOR DRIP TRAY P234		11007904
12	#N/A	YELLOW LEFT SIDE CASING P234		11007902
	#N/A	CARBONA LEFT SIDE CASING P234		11007738
13	#N/A	PANELVIT TCB SCREW 3X10 DIN 7505 Z		129660302
14	#N/A	SPRING FOR KNOB		DM0814
15	#N/A	TRANSPARENT FOOT		147622800
16	#N/A	ROTARY SWITCH FOR P234		12000824
17	#N/A	NATURAL/TRANSP.WATER CONTAINER P234ASSY		11008410
18	90001003	Filter, Water Tank		
19	90001004	O-Ring, Metric, Epdm, 0019-10		
20	11003672	Spring, Water Tank Valve P0049		
21	11003673	Valve, Insert, Water Tank		
22	11003671	Valve, Water Tank,		
23	11001298	Lid, Duckbill Valve, Blk		
24	#N/A	CABLE CLAMP V0 MAGIC ESP COMBI UL		148600600
25	#N/A	SUPPORT FOR SPHERAL UNION		4332055000
26	#N/A	ON-OFF BIPOL.SWITCH 122C1N2X001		5332004000
27	#N/A	UNION SPHERAL GRIVORY		4332049000
28	140324461	O-Ring, Metric, 0060-20		
29	#N/A	TUBE STEAM LOWER CHROMATE		AM0011/01
30	#N/A	COUPLING FOR SPHERIC UNION		4332050000
31	227431350	Pannarello, Black		
32	#N/A	YELLOW RIGHT SIDE CASING P234		11007901
	#N/A	CARBONA RIGHT SIDE CASING P234		11007737
33	#N/A	BLACK POWER CABLE USA SJT 3X18AWG L=1700		11009447

Nina Cappuccino

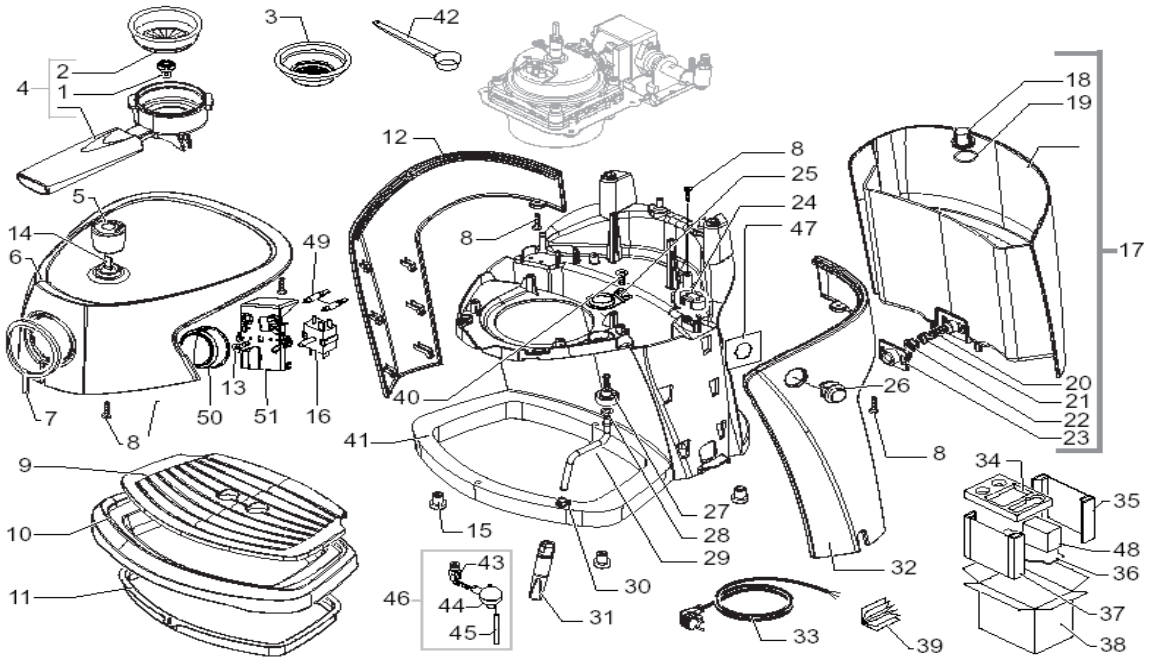

POS	SAECO No.	SIN026X Nina Cappuccino E71072 Rev. 02 Code: 10002574	NOTES	Italy Part No.
Yellow = Not Available unless Special Ordered				
34	#N/A	CARDBOARD UPPER INSERT FOR BOX P234		13000552
35	#N/A	CARDBOARD RIGHT INSERT FOR BOX P234		13000553
36	#N/A	CARDBOARD LOWER INSERT FOR BOX P234		13000666
37	#N/A	CARDBOARD LEFT INSERT FOR BOX P234		13000691
38	13000570	Box, Nina		
39	#N/A	MANUAL INSTRUCT 3 LANG.(P234/M) 120V		15001465
40	#N/A	SCREW TORX 4X10 UNI 9786 GALVANIZED		129912104
41	#N/A	CARBONA CASING P234		11005785
42	146680150	Measuring Scoop, Coffee, Black		
43	#N/A	90 DEG CONN. (FIXED) CAPPUCCINAT.BLACK		227910650
44	#N/A	SPHERICAL CAPPUCCINATORE ASS.BLACK NINA CAPPUCCINO		222520550
45	149360400	Tube, Silicone, 3.5x6, Capp'T		
46	11001977	Cappuccinatore Assy, Blk Spher		
47	#N/A	INSULATE PROTECTION FOR SWITCH P234 120V		11009485
48	#N/A	CARDBOARD CENTRAL INSERT FOR BOX P234		13000642
49	#N/A	ORANGE LAMP EL/F-MOD.7 120V		12001042
50	#N/A	CARBONA DRIVERS KNOB P234/M S/SCREEN		11005883
51	#N/A	WHITE DRIVERS SUPPORT P234/M		11007903

Nina Cappuccino

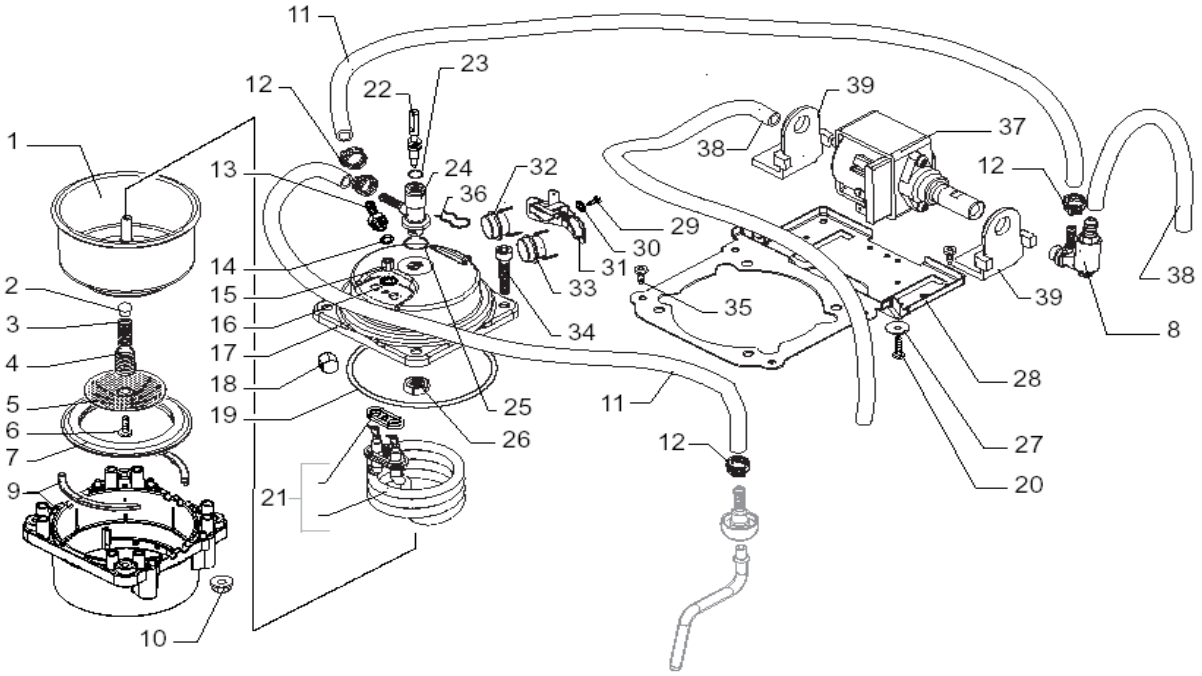

POS	SAECO No.	SIN026X Nina Cappuccino E71072 Rev. 02 Code: 10002574	NOTES	Italy Part No.
Yellow = Not Available unless Special Ordered				
1	11004588	Lower Boiler, Inner		
2	EF0012	Ball Valve		
3	EF0013	Spring		
4	11000996	Screw, Boiler Valve		
5	11001471	Screen, Boiler		
6	DI7987-5X8I	Screw, M5x8 DIN 965 Inox		
7	11004543	Gasket, Boiler		
8	11010166	Safety Valve Bar Assy,V2-P0049		
9	11007136	Lower Boiler, Outer Holder		
10	123270102	Nut, M6, W/Flange		
11	16000190	Tube, Silicone, 5 X 8, 9		
12	#N/A	OETIKER CLAMP D=9,5 16700004		12000892
13	11000998	Raccordo Boiler		
14	NM01028	O-Ring, Silicone, 106		
15	#N/A	BRASS NUT FOR STAINL.STEELNEWGEN BOILER		11001465
16	128310402	Washer Galv. UNI 8842 A4		
17	11001462	Upper Boiler		
18	#N/A	BRASS NOZZLE SS.BOILER NEWGEN		11001000
19	12000087	O-Ring, Silicone, 0850-30		
20	#N/A	SCREW AUT.TCB 3,5X13 DIN 7981 C		U109.013
21	11004509	Heat Element, Sirena		
22	#N/A	BRASS FAUCET SHAFT SS.BOILER NEWGEN		11001003
23	#N/A	OR 2018 IN VITON 70SH		WGADM0041/031
24	#N/A	BRASS FAUCET SS BOILER NEWGEN		11000995
25	140323062	O-Ring, Silicone, 2043		
26	123390109	Nut, 1/8 GAS H=6 CH=14 Nickelp		
27	U207004	Washer, Plain, 4.3X16, 7P		
28	#N/A	STEEL BOILER SUPPORT P236		11005070
29	#N/A	TCB SCREW M3X4 UNI 7687 ZNP		129821402
30	128310304	Washer, A3, Uni 8842, Burnish		
31	11000994	Spring, Thermostat Boiler		
32	12000160	Thermostat 95° US-622AXTDNO		
33	#N/A	THERMOSTAT 127° US-622AXTDNO		12000161
34	U023.022	Screw, M 6x30 UNI 5931 8.8 ZNP		
35	#N/A	SCREW TORX 4X10 UNI 9786 GALVANIZED		129912104
36	9011144	Clip, Hairpin, Teflon Tube		
37	187721455	Pump, Ulka, 120V, 60HZ		
37	12000130	Pump,Ulka,100V,60Hz,EP5/S GW		
38	JS01022	Tube,Silicone,5X10, L=200mm		
39	#N/A	BLACK PUMP SUPPORT TYPE ULKA		149205850

Nina Cappuccino

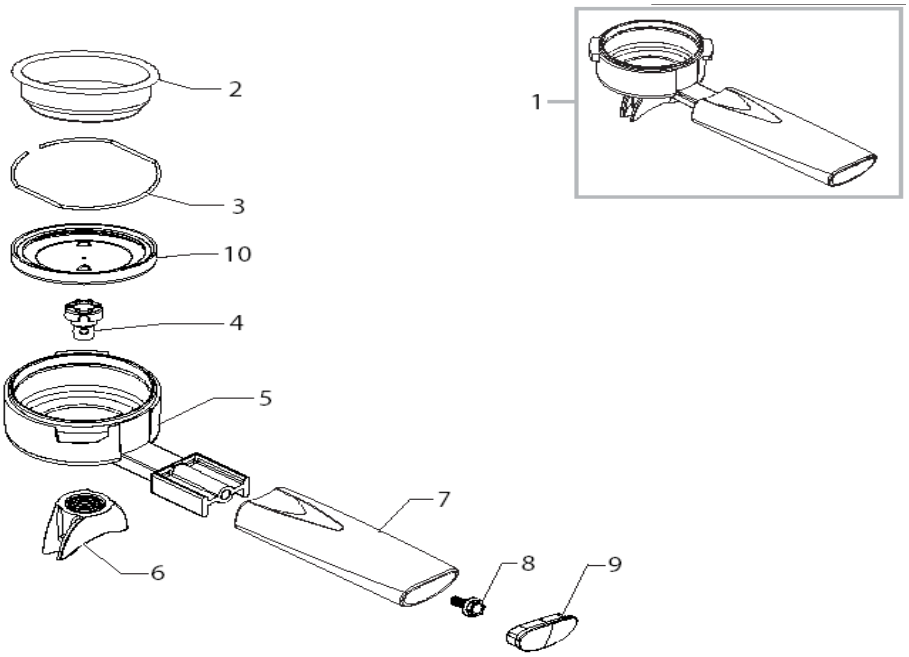

POS	SAECO No.	Portafilter P234 E90061 Rev. 02 Code: 11009765	NOTES	Italy Part No.
Yellow = Not Available unless Special Ordered				
1	#N/A	CARBONA FILTERHOLDER P234 ASSY.		11009765
2	11007038	Filter, Perfect Crema D.0.6 MM		
3	#N/A	RETAINING - FILTER SPRING		18G1514
4	4301007000	Support Peg		
5	#N/A	POLISHED ALLUM.FILTERH.NEWGEN		11007943
6	#N/A	POLISHED ALUM.2WAY COFF.DISPEN.P234		11008119
7	#N/A	CARBONA FILTERHOLD.HANDLE P234		11007905
8	#N/A	6X16 GALVAN. SPECIAL SCREW		WGADM1319
9	#N/A	CARBONA CAP FILTERHOL.HANDLE P234		11007945
10	GG0117	Rubber Gasket		